Obtain service at
www.shieldtechmonitoring.com

SECURITY UL LISTED

uplink® 4550-CB

4G CELLULAR ALARM COMMUNICATOR
WIRELESS COMMERCIAL SECURITY APPLICATIONS
PRIMARY OR BACKUP COMMUNICATIONS

INSTALLATION & USER'S GUIDE

PRODUCT ID # 202132UP455012

uplink® 4550-CB

4G CELLULAR ALARM COMMUNICATOR

© 2013 Uplink Security LLC. All rights reserved. Uplink is a trademark of Uplink Security LLC.
No part of this publication may be reproduced or used in any form without permission in writing from Uplink. This includes electronic or mechanical means, such as photocopying, recording, or information storage and retrieval systems. The material in this manual is subject to change without notice.

Uplink reserves the right to make changes to any software or product to improve reliability, function or design.

Uplink is a trademark of Uplink Security, LLC. All rights reserved. Other products' names mentioned in this manual may be trademarks or registered trademarks of their respective companies and are hereby acknowledged.

PRODUCT ID # 202132UP455012

TABLE OF CONTENTS

Introduction 3
Key Features 4-6
Warranty Information and Liability Waiver 7-9
LIMITED WARRANTY 7
LIMITATIONS of LIABILITY 9
FCC and Industry Canada Regulatory Compliance 10-12
Part 15 10
Part 68 11-12
FCC RF Exposure Information 13
Technical Support 14
Installation 15-32
A. General Considerations 15
B. DIP Switch Settings 15
C. LEDs 16-18
D. Locating and Installing the 4550-CB 19-22
E. Connecting the 4550-CB to the Alarm Panel & Telephone Jack 23-25
F. Activating the 4550-CB Unit 26-27
G. Programming and Central Station Reporting 28-30
H. Default Event/Email Messages 30
I. Completing the Installation and Testing 31
UL COMPLIANCE SECTION PART 1 – Installation Requirements 32-36
Specifications 37-38
Appendix A: Contact ID, SIA, Modem IIe/IIIa/IIIa^2 and DMP Event Codes 39-41
Appendix B: 4550-CB Default Event Codes 42-43

INTRODUCTION

Uplink's MODEL 4550-CB GSM Alarm Communicator is a UL Listed alarm and critical event communicator designed to interface with most manufacturers' alarm panels that incorporate a digital telephone dialer. The 4550-CB features a "dialer capture" interface to the alarm panel. If the alarm panel's TELCO connection is compromised, or if no TELCO connection is present, the 4550-CB will "intercept" the alarm panel's digital dialer output when the panel has an event to report, and communicate with the panel as if it were a central station alarm receiver. Once the 4550-CB communicates with the alarm panel, it transmits the alarm information to the central station receiver in Contact ID (SIA-DC05), SIA (SIA-DC03), Pulse 4+2, DMP or Modem IIe/IIIa/IIIa[2] formats.

The 4550-CB uses GSM technology to receive programming and send event information to the central station and can be used as the primary or backup communications path as a digital dialer (or DACT).

KEY FEATURES

A. FULL DATA Reporting. Compatible with most alarm panels using Contact ID (SIA DC-05 Standard), SIA FSK Level 1 (SIA DC-03 Standard), Pulse 4+2, DMP or Modem IIe/IIIa/IIIa[2] digital dialer formats. All information sent by the alarm panel in these formats (account number, zone information, user IDs, etc.) will be sent to the central station using the telephone line or the GSM network.

B. Telephone Line Supervision. Features a built-in telephone line monitoring circuit designed to detect voltage (in the On-Hook state) or voltage and current (in the Off-Hook state). If insufficient voltage or current is detected, a relay is activated causing the unit to "intercept" (or "capture") the alarm panel's digital dialer output and substitute the GSM cellular network for the Public Switched Telephone Network as the communications path for sending event information.

C. Panel to 4550-CB Cable Supervision. Monitors continuity of the cable connecting the panel's telephone dialer to the 4550-CB. This feature is activated through the web site **www.uplink.com** or by calling Uplink Customer Service at **1-888-9-UPLINK** (1-888-987-5465).

D. Zone Inputs. Reports programmed events to the central station.

Note: One suggested use for this feature is to allow a summary alarm output from the alarm panel to be connected to one of the inputs and report a summary alarm event to the central station. This prevents circumventing the TELCO supervision circuit, assuming that a compromised PSTN line is operational. This is a unique feature not found in many other dialer capture products on the market today.

(KEY FEATURES continued next page)

KEY FEATURES (cont.)

E. Three Relay Outputs. Activates upon the occurrence of one or more of the following trouble conditions:

- Cellular Network Loss
- No Central Station Acknowledgement
- AC Loss
- Low or Missing Battery
- Telco Line Loss
- Panel/MODEL 4550-CB Cable Supervision Trouble
- Activation of Input(s)
- Enclosure Tamper
- Unit Disabled by Dealer Command
- Watchdog Circuit Activation
- Catastrophic Failure Condition

F. Power Source Monitoring (AC & Low Battery Reporting). Reports low battery conditions to the central station when voltage drops below 10.2 VDC. Reports Low Battery Restoral at 11.4 VDC. It can also be programmed to report Loss of AC power to the central station. This occurs at 102 VAC and restores at 107 VAC.

G. Automated Testing. Sends an automated test signal to the central station on a monthly, weekly or daily interval as programmed.

H. GSM Network Supervision. Supervises the local GSM network. If the unit no longer locates the local GSM network, one of its output relays activates to report this trouble condition locally.

I. Status/Received Signal Strength LEDs. The five LEDs indicate the current operational status. These LEDs can be placed into Received Signal Strength Indication mode (RSSI) to assist in selecting the optimal mounting location for transmitting and receiving cellular radio signals.

(KEY FEATURES continued next page)

KEY FEATURES (cont.)

J. Easy Service Initiation. Ships with an active SIM card, with easy activations available via the Web at **www.uplink.com** or by calling Uplink Customer Service at **1-888-9-UPLINK** (1-888-987-5465). Requires the central station receiver phone number and/or its IP address and Port number.

K. Web-based Services. Available at **www.uplink.com** and include:

a. immediate, real-time activation
b. history of past event transmissions
c. initiation of a test report
d. the ability to query the unit and receive a real-time radio report status including a Received Signal Strength reading
e. programming inputs and other internally generated events

L. UL Listed. The Model 4550-CB unit is UL Listed and conforms to ANSI/UL Standards 365 and 1610 for Police Station Connected and Central Station Monitored commercial burglar alarm systems as well as UL 1635 Digital Alarm Communicator System Units. It is perfectly suited for use in any UL certificated alarm system that conforms to the above standards. *(See the UL Compliance Section of this manual for complete details.)*

WARRANTY INFORMATION AND LIABILITY WAIVER

STANDARD 12-MONTH LIMITED WARRANTY

The foregoing warranty applies only with respect to authorized Uplink dealers or other authorized Uplink reseller purchasing an Uplink 4550-CB or other Uplink Device Directly from Uplink. Uplink Devices purchased from an Uplink distributor or other third party reseller are not warranted to the purchaser by Uplink and are covered solely and exclusively by such warranty as may be separately offered by the distributor or reseller.

Except as otherwise agreed by Uplink in writing, Uplink warrants to authorized Uplink distributors or other authorized resellers who purchase Uplink Devices directly from Uplink that for 12 months following the date of purchase, said Uplink Devices will be free of defects in materials and workmanship when installed, operated, maintained, and serviced in strict accordance with Uplink's requirements. If an Uplink Device covered by the foregoing warranty fails because of a defect in materials or workmanship within the 12-month warranty period, Uplink will, at its sole option and at no charge, repair or replace it or arrange for its repair or replacement. Uplink's agreement to repair (using new or reconditioned parts) or replace (with an equivalent new or reconditioned device) an Uplink Device found by Uplink to be defective in materials or workmanship is the distributor's/reseller's exclusive remedy; this remedy will not be deemed to have failed of its essential purpose so long as Uplink is willing and able to repair or replace a defective Uplink Device as provided above or, at its sole option, to refund the purchase price paid. Any returns must be made in accordance with Uplink's then-current RMA process. Uplink Devices that have been repaired or replaced hereunder are warranted only for the remainder of the term of the original warranty. The foregoing warranty is limited and is the only warranty offered. It is non-transferrable. Uplink makes no other warranties, express or implied, including, without limitation, the implied warranties of merchantability and fitness

(WARRANTY INFORMATION AND LIABILITY WAIVER continued next page)

WARRANTY INFORMATION AND LIABILITY WAIVER (cont.)

for a particular purpose, non-infringement, interoperability with third party services, systems, and facilities, and non-obsolescence. The warranty set forth furthermore does not cover Uplink Devices that (a) have been improperly installed, operated, or serviced; (b) have been tampered with; or (c) have been subjected to environmental extremes.

LIMITATION OF LIABILITY

NEITHER UPLINK NOR ITS THIRD PART SERVICE PROVIDERS SHALL BE LIABLE TO ANY UPLINK DISTRIBUTOR OR RESELLER, ANY INSTALLER, ANY END USER OF AN UPLINK DEVICE OR UPLINK SERVICE, OR ANY OTHER THIRD PARTY FOR ANY CONSEQUENTIAL, INCIDENTAL, INDIRECT, EXEMPLARY, PUNITIVE, OR SPECIAL DAMAGES INCLUDING, WITHOUT LIMITATION, LOST DATA, SALES, REVENUES, OR PROFITS, REGARDLESS OF THE FORESEEABILITY OF SUCH DAMAGES. NEITHER UPLINK NOR ITS SERVICE PROVIDERS SHALL BE LIABLE FOR ANY CLAIM RESULTING FROM OR RELATING TO (A) THIRD PARTY CRIMINAL ACTIVITY OR FRAUD; (B) ACTS OR OMISSIONS OF UPLINK DISTRIBUTORS AND RESELLERS, END USERS OF UPLINK DEVICES OR UPLINK SERVICES, OR OTHER THIRD PARTIES; OR, (C) EXCEPT AS OTHERWISE MANDATED BY APPLICABLE LAW, BREACHES OF PRIVACY OR DATA SECURITY TRACEABLE TO THIRD PARTIES. NEITHER UPLINK NOR ITS SERVICE PROVIDERS SHALL BE LIABLE FOR ANY CLAIM RESULTING FROM THE FAILURE OF AN UPLINK DEVICE, UPLINK SERVICE, THIRD PARTY EQUIPMENT OR SERVICE, OR ANY END USE THEREOF INCLUDING, WITHOUT LIMITATION, A HEALTH, MEDICAL, ALARM, SAFETY, OR SECURITY APPLICATION, EVEN IF THE CLAIM IS ATTRIBUTABLE IN WHOLE OR IN PART TO AN ACT OR OMISSION OR OTHER FAULT ON THE PART OF UPLINK OR ITS SERVICE PROVIDER. IN NO EVENT SHALL UPLINK'S AND ITS SERVICE PROVIDER'S TOTAL, CUMULATIVE LIABILITY FOR ANY ONE OR

(WARRANTY INFORMATION AND LIABILITY WAIVER continued next page)

WARRANTY INFORMATION AND LIABILITY WAIVER (cont.)

MORE RELATED OR UNRELATED CLAIMS EXCEED AN AMOUNT EQUAL TO THE AGGREGATE AMOUNT PAID BY THE CLAIMANT FOR UPLINK SERVICE DURING THE 12 MONTH PERIOD PRECEDING THE DATE OF THE EARLIEST EVENT GIVING RISE TO THE SUBJECT CLAIM(S).

FCC & INDUSTRY CANADA REGULATORY COMPLIANCE

Part 15

This device complies with Part 15 of the FCC Rules. Operation is subject to the following two conditions: (1) this device may not cause harmful interference, and (2) this device must accept any interference received, including interference that may cause undesired operation.

This equipment has been tested and found to comply with the limits for a Class B digital device, pursuant to Part 15 of the FCC Rules. These limits are designed to provide reasonable protection against harmful interference in a residential installation. This equipment generates, uses and can radiate radio frequency energy and, if not installed and used in accordance with the instructions, may cause harmful interference to radio communications.

However, there is no guarantee that interference will not occur in a particular installation. If this equipment does cause harmful interference to radio or television reception, which can be determined by turning the equipment off and on, the user is encouraged to try to correct the interference by one or more of the following measures:

- Reorient or relocate the receiving antenna.
- Increase the separation between the equipment and receiver.
- Connect the equipment into an outlet on a circuit different from that to which the receiver is connected.
- Consult the dealer or an experienced technician for help.

(FCC & INDUSTRY CANADA REGULATORY COMPLIANCE continued next page)

FCC & INDUSTRY CANADA REGULATORY COMPLIANCE (cont.)

Part 68

This equipment complies with Part 68 of the FCC rules and the requirements adopted by the ACTA. On the side of the cover of the 4550-CB is a label that contains the product identifier, US: 3F0MO00BANYNETFDM. If requested, this number must be provided to the telephone company.

The 4550-CB employs two USOC RJ31X jacks.

The RJ31X plug and jack used to connect this equipment to the premises wiring and telephone network must comply with the applicable FCC Part 68 rules and requirements adopted by the ACTA. A compliant telephone cord and modular plug is provided with this product. It is designed to be connected to a compatible modular jack that is also compliant.

The **R**inger **E**quivalence **N**umber (REN) is used to determine the number of devices that may be connected to a telephone line. Excessive RENs on a telephone line may result in the devices not ringing in response to an incoming call. In most but not all areas, the sum of RENs should not exceed five (5.0). To be certain of the number of devices that may be connected to a line, as determined by the total RENs, contact your local telephone company. The REN for this product is part of the product identifier that has the format US:AAAEQ##TXXXX. The digits represented by ## are the REN without a decimal point (e.g., 03 is a REN of 0.3).

If the 4550-CB causes harm to the telephone network, the telephone company will notify you in advance that temporary discontinuance of service may be required. But if advance notice is not practical, the telephone company will notify the customer as soon as possible. Also, you will be advised of your right to file a complaint with the FCC if you believe it is necessary.

(FCC & INDUSTRY CANADA REGULATORY COMPLIANCE continued next page)

FCC & INDUSTRY CANADA REGULATORY COMPLIANCE (cont.)

The telephone company may make changes in its facilities, equipment, operations or procedures that could affect the operation of the equipment. If this happens, the telephone company will provide advance notice in order for you to make necessary modifications to maintain uninterrupted service.

If trouble is experienced with the 4550-CB, please contact Uplink Technical Support at **1-888-9-UPLINK (1-888-987-5465) for Repair and Warranty service.** If the equipment is causing harm to the telephone network, the telephone company may request that you disconnect the equipment until the problem is resolved.

The 4550-CB is not designed to be repaired in the field by an Installer. Repairs to this unit should only be undertaken by qualified Uplink Security personnel.

The 4550-CB should not be used on a party line. Connection to party line service is subject to state tariffs. Contact the state public utility commission, public service commission or corporation commission for additional information.

If your home has specially wired alarm equipment connected to the telephone line, ensure the installation of the 4550-CB does not disable your alarm equipment. If you have questions about what will disable alarm equipment, consult your telephone company or your alarm company.

FCC RF EXPOSURE INFORMATION

In August 1996 the Federal Communications Commission (FCC) of the United States with its action in Report and Order FCC 96-326 adopted an updated safety standard for human exposure to radio frequency electromagnetic energy emitted by FCC regulated transmitters. Those guide-lines are consistent with the safety standard previously set by both U.S. and international standards bodies. The design of this module complies with the FCC guidelines and these international standards. The FCC ID of this unit is TWV192513384X. For more information about RF exposure, please visit the FCC website at **www.fcc.gov.**

The term “IC” before the certification/registration number only signifies that the Industry Canada Technical Specifications were met. The external antennas used for this module must provide a separation distance of at least 20cm from all persons and must not be co-located or operating in conjunction with any other antenna or transmitter.

TECHNICAL SUPPORT

Technical support is available **Monday through Friday, 8:00 AM to 8:00 PM ET** excluding holidays. Before calling technical support please ensure to have read the installation guide completely. Technical support requires the caller to provide:

- **Login name**
- **Password**
- **Serial number of the 4550-CB**

UPLINK Technical Support

3330 Cumberland Blvd. SE
Suite 700
Atlanta, GA 30339
1-888-9-Uplink (1-888-987-5465)
Fax: 770-693-3501

For Customer Support, call **888-987-5465,** or visit **www.uplink.com**

INSTALLATION

A. General Considerations

Determine where to mount the unit. Keep the following in mind:

a. Obtain the best transmitted and received signal strength for the cellular radio. (If a very strong cellular signal is not available, first power the unit with the AC power and turn on S4 to test for the location that provides the best signal strength.)

b. Proximity to a Plug for the AC transformer.

c. Proximity to the alarm panel and where to route the 4550-CB unit's relay outputs that connect to the alarm panel unit's inputs, and vice versa. (These wires will need to be in conduit for a UL certificated installation. See the UL Compliance Section.)

d. Proximity to the RJ31X Telco jack from the telephone system.

B. DIP Switch Settings

The 4550-CB has a four-position dipswitch. The dipswitches function as follows:

SWITCH NO.	SETTING	FUNCTION
S1: Default Load	OFF	Normal Operations
	ON	Load Defaults
S2: Over-the-Air (OTA) Operation	OFF	OTA configuration allowed
	ON	OTA configuration blocked
S3: Battery Mode Override	OFF	Normal Operation
	ON	Battery Mode Override enabled
S4: LED Function	OFF	Normal Operations
	ON	RSSI Measurements

Battery Mode is a low current default that extends battery life to its maximum in accordance with UL requirements. In this mode, the amp-hour rating of the battery is approximately equivalent to the number of days that the unit will operate in standby before the battery is depleted, assuming that an active phone line has been plugged into the unit.

(INSTALLATION continued next page)

INSTALLATION (cont.)

Sometimes it is convenient to allow full power operation while on Battery (such as finding the optimum location to install using the RSSI function). S3 will allow the user to override the battery mode. This switch must be returned to the OFF position for normal operation, and for a proper UL installation.

If S1 is used to restore a unit to its factory default settings, it must be enabled after power on, and left on for approximately 1 minute. Then power must be removed and S1 restored to its OFF position. **All website configurations will be erased by using S1.**

C. LEDs

Normal Mode: Upon initial power up, the 5 LEDs on the 4550-CB will begin to function as follows:

LED	LED STATUS	LED MEANING
Power LED (#1)		
OFF		No AC power is present
GREEN	On	AC power is present
	Flashing	Operating on Battery power only (all other LEDs are disabled)
RED	Flashing	Operating on AC power and no battery is connected or the battery voltage is lower than 10.2 V OR Operating on battery power only and the battery voltage is less than 10.2V (all other LEDs are disabled).

(INSTALLATION continued next page)

INSTALLATION (cont.)

LED	LED STATUS	LED MEANING
Telco LED (#2)		
OFF		Phone line is not monitored
GREEN	On	Phone line is OK (Telco primary mode), Panel or Extension is on-hook
	Flashing	Panel or Extension Line is off-hook
RED	On	Phone line Trouble Condition
Trouble LED (#3)		
GREEN	On	All 3 Output Relays Normal
RED	On	One or more Output Relay Off-Normal
GSM Comm LED (#4)		
GREEN	On	Unit registered on the network
	Flashing	Waiting for an ACK from the Central Station
RED	On	Unit not registered or No Cellular Network
Heartbeat LED (#5)		
GREEN	Flashing	Unit is functioning normally
RED	Flashing	S1 is ON after reset

INSTALLATION (cont.)

RSSI Mode: When the 4550-CB is placed in Received Signal Strength Indicator (RSSI) Mode by turning Dipswitch S4 to ON, the five LEDs indicate the following signal strength information:

RECEIVED SIGNAL STRENGTH	APPEARANCE OF LEDs (#1 thru #5)	
≥ -50 dBm	●●●●● **#1**: green, solid; **#2**: green, solid; **#3**: green, solid; **#4**: green, solid; **#5**: green, solid	GOOD
≥ -60 dBm	○●●●● **#1**: off; **#2**: green, solid; **#3**: green, solid; **#4**: green, solid; **#5**: green, solid	GOOD
≥ -70 dBm	○○●●● **#1**: off; **#2**: off; **#3**: green, solid; **#4**: green, solid; **#5**: green, solid	GOOD
≥ -80 dBm	○○○●● **#1**: off; **#2**: off; **#3**: off; **#4**: green, solid; **#5**: green, solid	GOOD
≥ -90 dBm	○○○○● **#1**: off; **#2**: off; **#3**: off; **#4**: off; **#5**: green, solid	MINIMUM ACCEPTABLE
≥ -100 dBm	○○○○☼ **#1**: off, **#2**: off; **#3**: off; **#4**: off; **#5**: green, flash	UNACCEPTABLE
≥ -110 dBm	○○○○● **#1**: off; **#2**: off; **#3**: off; **#4**: off; **#5**: red, solid	UNACCEPTABLE
≤ -111 dBm	○○○○☼ **#1**: off, **#2**: off, **#3**: off, **#4**: off, **#5**: red, flash	UNACCEPTABLE
No signal	○○○○○ All OFF	

(INSTALLATION continued next page)

INSTALLATION (cont.)

D. Locating and Installing the 4550-CB

Note: For a UL Certificated Installation, additional installation requirements and tested configurations are located in the UL compliance section.

The Model 4550-CB unit comes in a metal enclosure. The installer needs to supply the unit's 16.5 VAC – 45VA transformer (Recommended Transformers: Elk TRG1640, MG Electronics Model MGT1640 or equivalent) and a 12VDC, 5 AH backup battery (Recommended Battery: Powersonic PS-1250F1 or equivalent).

After carefully considering all issues outlined in the General Considerations section on page 15, proceed as follows:

1. Open the enclosure's door. Locate the four (4) mounting holes. Use the enclosure as a template to mark where to drill holes for the screws and anchors that will hold the enclosure in place on the wall.
2. Connect the supplied antenna with the 4550-CB. The Antenna supplied may differ from the ones depicted in the figures in this manual.
3. Go to the red, 4-position Dipswitch as shown in Figure 1 and set the dipswitch as appropriate for this installation (table on page 15).
4. Place Dipswitch #4 (S4) in the ON position. The LEDs are now operating in RSSI Mode. Locate a good mounting position based on a good Received Signal Strength Indication (RSSI). **It is recommended that the installation location demonstrate an RSSI of at least -80 dBm (2 solid green LEDs).** The minimum acceptable RSSI is -90 dBm (1 solid green LED). If the minimum acceptable RSSI cannot be achieved with the supplied antenna at the installation location, contact customer service.

(INSTALLATION continued next page)

INSTALLATION (cont.)

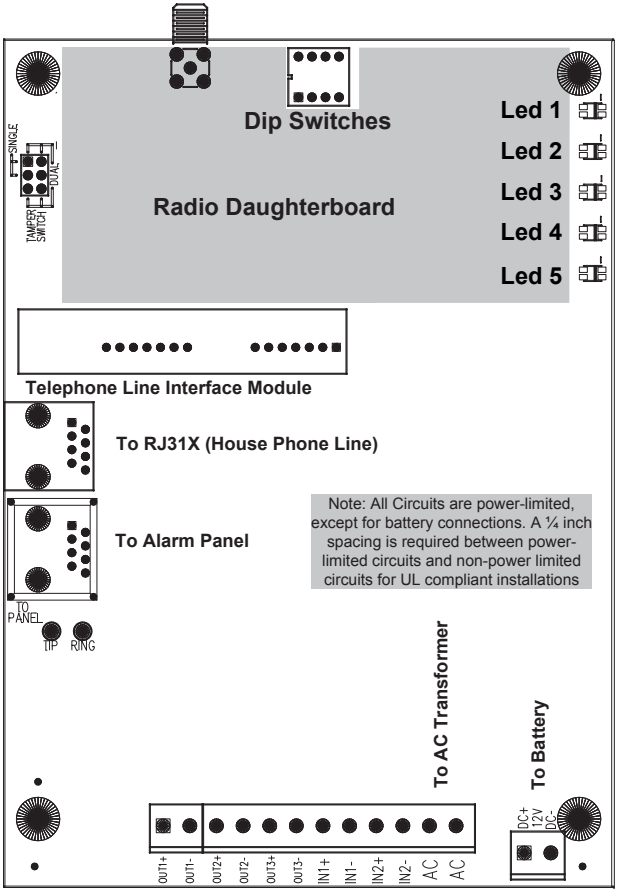

FIGURE 1: 4550-CB PC BOARD DETAILS

(INSTALLATION continued next page)

INSTALLATION (cont.)

Position the bottom of the 4550-CB enclosure where it will be installed. Use four (4) #6 screws and mount the unit using the four holes in the enclosure's back. The 4550-CB unit's dimensions are shown in Figure 2.

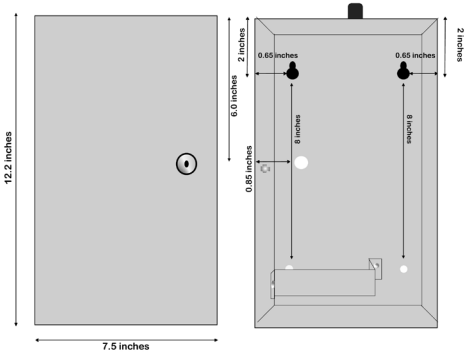

FIGURE 2:
INSIDE & OUTSIDE MOUNTING DIMENSIONS FOR THE 4550-CB

5. Place the backup battery into its location in the bottom of the enclosure. Secure the battery in place using the metal battery bracket and nuts provided.
6. Connect the positive (+) and negative (-) terminals of the battery to terminals DC+ and DC- respectively on the 4550-CB terminal strip. Use 18 to 14 gauge insulated copper wire.

(INSTALLATION continued next page)

INSTALLATION (cont.)

7. Connect the wires from the 120 to 16.5 VAC, 45VA transformer to the terminal strip positions designated as “AC” on the unit’s terminal strip. Plug the transformer into a 120 VAC non-switched outlet. Use 18 to 14 gauge insulated copper wire for wire lengths of 10 to 25 feet respectively. *(See the UL compliance sections for additional details.)*

CAUTION: Incorrect Connections May result in Damage to the Unit

8. Double check to make sure that the RSSI is still showing a good signal strength level.
9. Connect the unit’s tamper switches. For a single tamper switch, connect the switch plug to the top of the left-most column of JP13. For a dual tamper switch installation, connect the tamper switch plugs to the top and bottom rows of JP13.
10. Before connecting the alarm panel and the 4550-CB, first:
    a. Return Dipswitch #4 (S4) to the OFF position.
    b. Disconnect the AC transformer from its power outlet.
    c. Disconnect the Positive and Negative connections to the battery.

(INSTALLATION continued next page)

INSTALLATION (cont.)

E. Connecting The 4550-CB to the Alarm Panel and Telephone Jack

IMPORTANT: Make all of the connections to the 4550-CB in the powered down state. Once all of the connections have been established, turn power on.

1. First, remove AC and battery power from the 4550-CB, then proceed as follows:
2. Dialer & Telco Connections.
   a. Use the dual modular plug telephone cable provided with the 4550-CB to connect it to the premises' RJ31X jack. On the 4550-CB's side, one end of the cable should be plugged into Jack JP4 (the Jack closer to the Antenna). The other end of the cable should be plugged into the RJ31X unit's modular jack.
   b. Connect the alarm panel's telephone output to the 4550-CB with an appropriate cable. On the 4550-CB's side, the cable should use an RJ45 plug and be connected into Jack JP3 (the Jack closer to the Terminal Strip).

WARNING: High Voltage Present at Phone Lines. Disconnect Prior to Servicing.

3. Inputs
   The 4550-CB has two EOLR supervised inputs that report to the central station when activated. These inputs are disabled in the default state and must be enabled via the Dealer Web Site. The EOL resistors should be 2.2 kohms.

   Connect activations devices into the terminal strip IN 1+ and IN 1- for the first device, and IN 2+ and IN 2- for the second device as needed. Both inputs are Normally Open.

(INSTALLATION continued next page)

INSTALLATION (cont.)

NOTE: It is recommended that Input 1 be used as a "Summary Alarm" input from the alarm panel if the panel is capable of providing such an output. This will provide the system with additional protection by reporting an alarm to the central station in the unlikely event that the Telephone Line Supervision Circuit has been circumvented by a perpetrator.

4. Outputs
   The 4550-CB has three relay outputs that can be used to activate inputs on the alarm panel or for other local purposes. Decide on how to use these outputs, then wire them to terminal strip JP10 as follows:

Output #1	Out 1+ and Out 1-
Output #2	Out 2+ and Out 2-
Output #3	Out 3+ and Out 3-

The default states for these 3 Outputs are as follows:

OUTPUT	DEFAULT STATE	DEFAULT DEFINITION
#1	Energized closed (N.O.)	Loss of cellular service
#2	Energized closed (N.O.)	Failure to receive ACK from Central Station
#3	Energized open (N.C.)	Total failure of Model 4550-CB

See Figure 3 as an example of how to connect the 4550-CB to the alarm panel and the telephone line.

(INSTALLATION continued next page)

INSTALLATION (cont.)

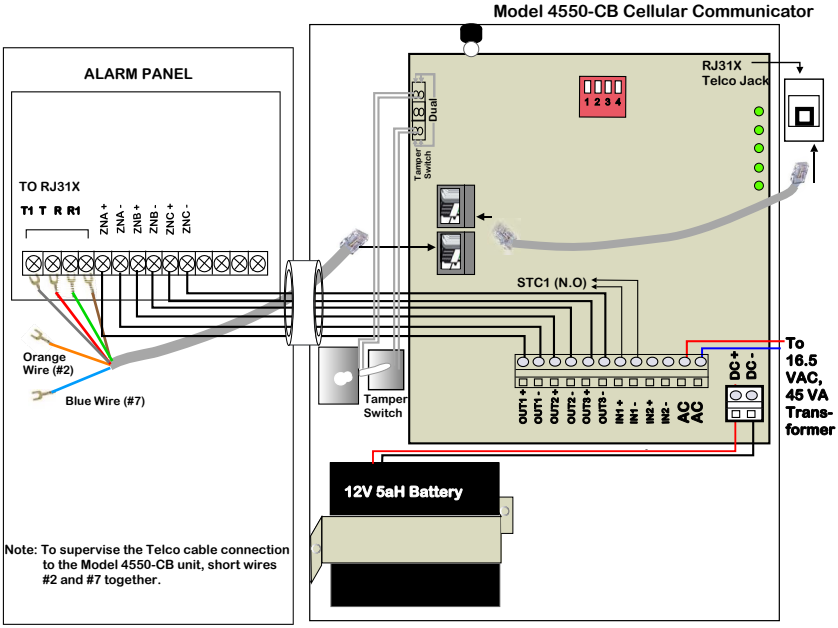

FIGURE 3: EXAMPLE CONNECTIONS BETWEEN THE 4550-CF AND THE ALARM PANEL. REFER TO UL COMPLIANCE SECTION FOR SPECIFIC UL WIRING REQUIREMENTS AND INSTALLATION NOTES.

(INSTALLATION continued next page)

INSTALLATION (cont.)

F. Activating the 4550-CB Unit

The 4550-CB is programmed OTA (Over-the-Air) by accessing the Uplink Dealer web site or by calling Uplink Customer Service at **1-888-987-5465.**

New Dealer 4550-CB Activation:

For new dealers/customers, establish an account with Uplink by visiting the Uplink web site **(www.uplink.com)**.

a. Click on **UPLINK DEALERS new/existing dealer access** tab.
b. Click on the **New Dealer Signup** button.
c. Enter all information in the sign up form. Note: You must read and accept the terms of the Activation Agreement. Click the **Setup** button.
d. A box will appear saying **"If you want monthly service billed to a 3rd party such as a central monitoring station then you should NOT request an account – please contact Uplink Sales at 1-888-987-5465."** Click **OK**.
e. A confirmation box will appear saying **"Congratulations, your new Uplink Account was successfully created!"** Press **OK**.
f. Select the **UPLINK DEALERS new/existing dealer** button at the top of the page. Enter the newly created Login Name and Password to sign into the website. **Wait about 20 seconds for the next web page to completely install.**
g. Select **Activate Unit** from the menu choices.
h. Answer **"Yes"** to the question **"I have read and I accept the terms of the Activation Agreement"**.
i. Enter the device serial number and select **Activate.**
j. Enter all appropriate customer information.
k. From the **Central Station Notification** drop down menu, select the appropriate format.
l. Enter the appropriate Central Station phone number and account number.
m. Configure the device to meet your install needs.
n. Select **Update**.
o. From the **Programming** drop down menu, select **Program Unit Over the Air.**
p. Set the appropriate Dialer Protocol select **Send**.

(INSTALLATION continued next page)

INSTALLATION (cont.)

q. From the **Test** drop down menu, select **Send Status Request Signal**.
r. Activation is complete once a successful test message is displayed.

Existing Dealer 4550-CB Activation:

For dealers/customers who already have an account with Uplink, go to the Uplink web site **(www.uplink.com)**.

a. Enter the Login Name and Password. **Wait about 20 seconds for the next web page to completely install.**
b. Select **Activate Unit** from the menu choices.
c. Answer "**Yes**" to the question **"I have read and I accept the terms of the Activation Agreement".**
d. Enter the device serial number and select **Activate**.
e. Enter all appropriate customer information**.**
f. From the **Central Station Notification** drop down menu, select the appropriate format**.**
g. Enter the appropriate Central Station phone number and account number**.**
h. Configure the device to meet your install needs.
i. Select **Update**.
j. From the **Programming** drop down menu, select **Program Unit Over the Air**.
k. Set the appropriate Dialer Protocol select **Send**.
l. From the **Test** drop down menu, select **Send Status Request Signal.**
m. Activation is complete once a successful test message is displayed.

(INSTALLATION continued next page)

INSTALLATION (cont.)

G. Programming and Central Station Reporting

Programming requires the telephone number of the monitoring central station's alarm receiver and/or its IP address and Port number. Determine whether to use the default settings for the events to be reported or customize them by completing the following:

Use this web site to program:

a. Which alarms will be sent to the central station via a telephone dialer.
b. The telephone number of the central station receiver where all of the signals should be sent.
c. The account number to be sent to the central station for events generated by the 4550-CB.
d. What event codes should be sent for the 2 Inputs/zones (for both the normal and alarm states).
e. What event codes should be sent for Low Battery and Low Battery Restoral.
f. Whether alarm events should also be sent to an email account, and the email account's address.

The following parameters can be configured from the Dealer Web Site;

1. **Dialer Intercept Mode Status** (Default=Intercept determined by Line Monitor).
   The 4550-CB normally uses its built-in Telephone Line Monitoring circuit to determine whether the unit should intercept the alarm panel's digital dialer or leave it connected to the premises telephone line. However, the unit can be programmed from the Dealer Web Site to permanently intercept the panel's dialer (RF Only Mode) or never intercept the panel's dialer.
2. **Automated and On Demand Test Signals** (Default = Weekly)
   The Automated Test signal interval can be changed to Daily or Weekly from the Dealer Web Site. In addition, an immediate test signal can be generated.

(INSTALLATION continued next page)

INSTALLATION (cont.)

3. **Activate/Deactivate Output Relays**
   Output relays #1, #2 and #3 can be activated or deactivated from the Dealer Web Site. This feature allows immediate testing of the correct operation of these outputs when connected to the alarm panel.
4. **Normal State of Output Relays** (Default = #1 Energized Closed, #2 Energized Closed, #3 Energized Open)
   The normal state of each of the three Output Relays can be changed from the Dealer Web Site.
5. **Normal State of Inputs** (Default = #1 N.O., reports Alarms & Troubles, #2 N.O., reports Alarms & Troubles)
   The normal state of each of the two Inputs can be programmed from the Dealer Web Site as Normally Open/Normally Closed, and whether the unit will send Alarms and Troubles, or Alarms only.
6. **Definition of Output Relay** (Default = #1 Loss of Cellular Service, #2 Central Station ACK Failure, #3 Total Unit Failure)
   There are 11 Trouble states that can be declared by the 4550-CB. Each of these states can be programmed from the Dealer Web Site to activate one of the three Output Relays. The 11 Trouble states are:
   - AC Power Loss
   - Low Battery
   - Telco Trouble
   - Cable Supervision Trouble (Panel to Model 4550-CB)
   - Loss of Cellular Service
   - Model 4550-CB Unit Disabled (via Web Site command)
   - Failure to receive ACK from Central Station
   - Watchdog Circuit Trouble
   - Input 1 Off-Normal
   - Input 2 Off-Normal
   - Total Unit Failure (defined as Loss of AC power and battery voltage below 5.0 volts)

(INSTALLATION continued next page)

INSTALLATION (cont.)

7. Send Trouble Condition to Central Station

Any or all of the Trouble Conditions detectable by the 4550-CB can be programmed to report that condition (and its Restoral) to the monitoring Central Station.

See APPENDIX A for a list of Contact ID, SIA, Modem IIe/IIIa/IIIa^2 and DMP format event codes generated by the 4550-CF that can be sent to the central station receiver.

See APPENDIX B for a list of the default event codes transmitted by the 4550-CF.

H. Default Event/Email Messages

Email and Text Messaging will only be available for Status events (e.g., Low Battery, Test, etc.) and state transitions on the 2 Inputs of the 4550-CB.

(INSTALLATION continued next page)

INSTALLATION (cont.)

I. Completing the Installation and Testing

Once the physical installation is complete, the unit is activated from the Dealer Web Site, and programming changes are made, test the 4550-CB along with the alarm panel to ensure everything is functioning properly.

Test the following:

a. Check to see that all 5 LEDs are green. The first 4 LEDs should be solid green, and the 5th LED should be flashing green.

b. Disconnect the Telco Line, wait the appropriate period of time, then check to see that 1) the Telco LED has turned solid red, and 2) a Telco Trouble condition has been reported to the monitoring central station (if this feature is active).

c. With the Telco Line still disconnected, trip an alarm on the alarm panel. Check that the 4550-CB has correctly intercepted the panel's digital dialer output and reported the event to the central monitoring station. Reconnect the Telco Line.

d. If using one or both of the inputs on the 4550-CB, check to ensure both are properly activated and reporting to the central station.

e. If using one or more of the Output Relays on the 4550-CB, then go back to the Dealer Web Site and use the Switch Output Relay command to test each relay. Make sure the alarm panel properly detects the relay's change of state and reports the proper event to the central station.

f. Remove AC power and Battery Power from the 4550-CB, then trip an alarm on the alarm panel. Confirm the panel's digital dialer properly sends this event to the central station. Reconnect AC and Battery.

UL COMPLIANCE SECTION – INSTALLATION REQUIREMENTS

For installations that are intended to meet UL certification requirements, the following items must be adhered to during the installation for each stated certificate category. The Installation and Wiring requirements are in accordance with the National Electrical Code, NFPA/70.

The 4550-CB has been tested for compliance by UL in an installation where the POTS line is the primary communication path and the Cellular channel is secondary.

Commercial Burglary (UL 1610 - Category AMCX, UL 365 – Category APAW)

1. For a UL Certificated Installation, the 4550-CB must be connected to a Listed panel, sch as a DSC PC1616 panel and a Listed DACR, such as the DSC, Model SG-System III and configured to communicate via Contact ID protocol.
2. Installation of the UL Listed alarm panel must be in accordance with the manufacturer's written UL Compliance rules for the type of UL certificate to be achieved. This applies to both the physical installation requirements and the unit's programming requirements.
3. Power to the 4550-CB must be supplied from an Elk TRG1640 16.5VAC – 45VA UL Listed wall transformer. This transformer must be secured to the AC outlet with the security screw. The wire rating of this connection must exceed 16.5VAC. The transformer must be plugged into an un-switched AC outlet. This Elk transformer is available by calling Uplink Customer Service at 1-888-9-UPLINK (1-888-987-5465) or by contacting your local UPLINK distributor.
4. Use a UL-Listed 12VDC 5.0 Ampere hour rated sealed lead-acid rechargeable battery with the Model 4550-CB unit. (Recommended Battery: Powersonic PS-1250-F1 or equivalent)

(UL COMPLIANCE SECTION continued next page)

UL COMPLIANCE SECTION – INSTALLATION REQUIREMENTS (cont.)

5. The Model 4550-CB unit must be located within the same room as the alarm panel and a maximum of 20 feet of the alarm panel. The 4550-CB must be installed at the protected premises.
6. The wiring between the Model 4550-CB unit and the alarm panel must be in conduit.
7. All power-limited wiring must be secured a minimum of 1/4 inch away from all non-power-limited high voltage wiring, and all non-power-limited high voltage wiring must be routed through a different conduit than any of the power-limited wiring or cable. The only non-power limited wiring is between a battery and the 4550-CB DC terminals.
8. Both the alarm panel's DACT and the Model 4550-CB unit must be used for alarm communications to the central monitoring station's UL Listed digital alarm receiver.
9. The telephone line connected to the RJ31X jack cannot be connected to a PBX system.
10. The Model 4550-CB unit must be programmed to send a Test signal to the central station a minimum of once every 24 hours.
11. The following troubles are to be programmed to output #1 or output #3 – Loss of AC, low battery, telco loss, Cellular loss, and catastrophic failure simultaneously. In addition, outputs 1 and 3 shall be connected to a reporting zone on the alarm panel, and the zone must be set up as closed in the normal state and open in the off-normal state. Activation of this zone must annunciate locally at the keypad which shall be programmed to display the message "For trouble see panel" or similar.

(UL COMPLIANCE SECTION continued next page)

UL COMPLIANCE SECTION – INSTALLATION REQUIREMENTS (cont.)

12. The Model 4550-CB Output Relay #2 must be programmed for Failure to Receive ACK from the Central Station (i.e., Communications Failure), must be connected to a reporting zone on the alarm panel and the zone must be set up as closed in the normal state and open in the off-normal state. Activation of this zone must annunciate locally using the bell squawk for the DSC, PC1616 control panel.
13. The two (2) tamper switches provided with the Model 4550-CB must be installed and connected to a 24 hour alarm input on either the Model 4550-CB unit or the alarm panel. The lock and key provided with the unit must also be installed and used.
14. **Not evaluated by UL:** When the Model 4550-CB is employed in UL Bank, Safe and Vault installations, pay particular attention to the requirements for additional backup battery power (i.e., 80 hours), and shock or vibration sensors. In this application, the required backup battery is a UL-Listed 12VDC, 12.0 AH battery. (Recommended Battery: PowerSonic 12120 or equivalent) The recommended vibration sensor is Model PL-EVD2 from Potter Electronic and the recommended access control unit power supply is an Altronix AX-AL1012ULX. For UL Bank Safe and Vault installations, the following additional requirements apply:
    a. the wires to the AC transformer must be located in conduit.
    b. the AC transformer must be plugged into a dedicated AC branch circuit.
    c. the AC transformer must be enclosed in a UL Listed pull box.
    d. the recommended UL listed battery must be installed external to the 4550-CB in a UL listed pull box (E.G Hoffman ASG 8x8x4 or equivalent)
    e. the wires to the battery must be enclosed in conduit.
    f. the installation of the battery, transformer and 4550-CB must be done in accordance with local wiring codes and NFPA 70 and 72.

(UL COMPLIANCE SECTION continued next page)

UL COMPLIANCE SECTION INSTALLATION REQUIREMENTS (cont.)

15. For maximum attack resistance, all knock-outs must be attached to conduit. Furthermore, all one-way tamper screws must be used to secure the door to the base and these tamper screws must be replaced after each service. Entry delay of compatible alarm panel shall not exceed 44 seconds.
16. The S3 switch must be returned to the OFF position for normal operation and for a proper UL installation.
17. The wire connecting the 4550-CB to the POTS line shall be a minimum of 26 AWG and must use a minimum 300V insulation jacket.
18. The Loss of Cellular Service must be configured for 200 second supervision.
19. DAC communications must be configured for no less than five, and no more than 10, attempts.
20. Low battery trouble shall be annunciated at the central station.
21. The status of each device must be checked every 90 seconds or less.
22. Refer to LED Table and wiring diagrams in preceding sections of this manual.
23. The Acknowledgement signal for the exit delay may be transmitted from the central station over either the GSM or the PSTN communications path.
24. If the antenna which protrudes through the Model 4550-CB's enclosure is used, then the area where the unit is installed must be protected by a motion detector which is wired back to Input No. 2 on the Model 4550-CB terminal strip. This input must be programmed as an instant activation, 24 hour reporting zone.
25. All connections to the base terminal block must be made with insulated stranded copper wires using the wire gauge and length recommendations below:

Recommended Wire Size	Maximum Length
18 gauge	20 ft
16 gauge	40 ft
14 gauge	60 ft

UL COMPLIANCE SECTION INSTALLATION REQUIREMENTS (cont.)

26. All connections to the UL battery must be made with stranded copper insulated wires using the wire gauge and length recommendations in the proceeding instruction. Additionally, connections to the battery shall be made with insulated terminal connectors with a current rating of 2A or greater. All batteries must be installed and replaced by qualified personnel. Furthermore, the connections to the batteries are considered non-power limited circuits and all non-power-limited high voltage wiring must be secured a minimum of 1/4” inch away from all power-limited wiring.
27. The 4550-CB has two EOLR supervised inputs that report to the central station when activated. These inputs are disabled in the default state and must be enabled via the Dealer Web Site. Two insulated EOL resistors are enclosed and only those insulated EOL resistors have been tested by UL. Additionally, the resistor(s) must be fastened securely to the appropriate input, with no means to open circuit, short to an adjacent circuit or cause a risk of electric shock. See Figure 5 for further details.

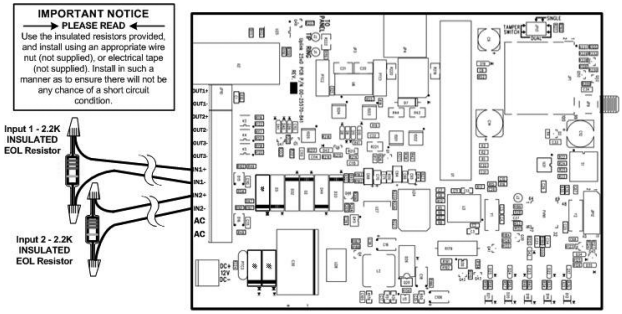

FIGURE 5:
CONNECTIONS BETWEEN THE 4550-CB AND THE EOL RESISTORS.

SPECIFICATIONS

Panel to 4550-CB Interface	
Line Voltage	48 VDC On-Hook
Dial tone	350 + 440 Hz +/- 0.2%
Distortion	All tones less than 2.0%
DTMF twist accuracy	+/- 1 dB
Panel tones	+/- 0.2%
Receive level minimum	- 45 dBm
Receive S/N minimum	20 dB
Line impedance	600 ohms
Ringer Equivalence	0.3 REN
Mode	Loop start. 26 mA typical
Phone Line Monitor	
On-Hook voltage	8 - 50 VDC
Off-Hook current	≥ 10.0 mA
Power	
AC Transformer	16.5 V 45VA
AC Supply	120VAC, 60Hz, 430mA
Normal Current (On Hook)	125 mA
Maximum Current (Off Hook)	600 mA
Battery standby current	20 MA
Battery	12V, 5.0 AH
Battery Charging System	Pulsed width modulated constant voltage. Electronic short circuit protection, Thermal protection

(SPECIFICATIONS continued next page)

SPECIFICATIONS

Power (cont.)	
Maximum Battery charging current	700 mA for 5.0aH battery
Maximum full charge DC voltage	13.6V +/- 0.2V
Maximum Ripple	20mV
Radio	
Frequencies	850/1900 MHz
Avg. Current	290 mA
Peak Current	2A
DC Voltage	3.3- 4.2 V D.C.
Sensitivity	-109 dB (typical)
Environmental	
Temperature Range	0° to +49° C
Humidity	0 to 85% non-condensing
Physical	
Height	12.2 inches
Width	7.5 inches
Depth	3.9 inches
Weight	7 pounds, 12 ounces (with recommended battery)

(SPECIFICATIONS continued next page)

APPENDIX A:
CONTACT ID, SIA, MODEM IIe/IIIa/IIIa² AND DMP EVENT CODES

Following is a list of event codes that can be sent to the central station receiver for events generated by the 4550-CB unit

EVENT DESCRIPTION	CONTACT ID EVENT CODE	SIA DC-03 EVENT CODE	MODEM IIe/ IIIa/IIIIa²	DMP EVENT CODE
AC Fail	E301	AT	48	Zs...008
AC Restoral	R301	AR	49	Zs...000
Alarm (generic)	E140	UA	10	Za...BL
Burglary Alarm	E130	BA	10	Za...BU
Burglary Restoral	R130	BR	12	Zr...BU
Burglary Tamper	E137	TA	10	Zs...011
Burglary Tamper Restoral	R137	TR	12	Zs...003
Closing	R400	CL	32	Zq...CL
Fire Alarm	E110	FA	0B	Za...FI
Fire Restoral	R110	FR	0E	Zr...FI
Fire Supervisory	E200	FS	11	Za...SV
Fire Supervisory Restoral	R200	FJ	12	Zr...SV
High Temperature	E158	KA	10	Za...A1
High Temperature Restoral	R158	KR	12	Zr...A1
Holdup Alarm	E122	HA	10	Za...PN
Holdup Restoral	R122	HR	12	Zr...PN
Low Battery	E302	YT	4B	Zs...009

(APPENDIX A continued next page)

APPENDIX A:
CONTACT ID, SIA, MODEM IIe/IIIa/IIIa² AND DMP EVENT CODES (cont.)

EVENT DESCRIPTION	CONTACT ID EVENT CODE	SIA DC-03 EVENT CODE	MODEM IIe/ IIIa/IIIa²	DMP EVENT CODE
Low Battery Restoral	R302	YR	4C	Zs...001
Low Temperature	E159	ZA	10	Za...A1
Low Temperature Restoral	R159	ZR	12	Zr...A1
Medical Alarm	E100	MA	10	Za...EM
Medical Restoral	R100	MR	12	Zr...EM
Opening	E400	OP	2F	Zq...OP
Panic Alarm	E120	PA	10	Za...PN
Panic Restoral	R120	PR	12	Zr...PN
Phone Fail	E350	LT	44	Zs...028
Phone Restoral	R350	LR	45	Zs...029
Radio Supervision Lost	E355	YC	11	Zs...072
Radio Supervision Restoral	R355	YK	12	Zs...073
Restoral (generic)	R140	UR	12	Zr...BL
Service Completed	R616	YZ	12	Zr...SV
Service Required	E616	YX	11	Zw...SV
Telco Line Fail	E350	LT	44	Zs...028
Telco Line Restoral	R350	LR	45	Zs...029

(APPENDIX A continued next page)

APPENDIX A:
CONTACT ID, SIA, MODEM IIe/IIIa/IIIa² AND DMP EVENT CODES (cont.)

EVENT DESCRIPTION	CONTACT ID EVENT CODE	SIA DC-03 EVENT CODE	MODEM IIe/ IIIa/IIIIa²	DMP EVENT CODE
Test	E602	TX	33	Zs...007
Trouble (generic)	E300	UT	11	Zt...BL
Trouble Restoral (generic)	R300	UR	12	Zr...BL
Trouble, System Peripheral	E330	ET	11	Zt...A1
Trouble Restoral, System Peripheral	R330	ER	12	Zr...A1

APPENDIX B:
MODEL 4550-CB DEFAULT EVENT CODES

The 4550-CB can be set to send both the Alarm/Trouble condition and the Restoral condition for all of the events listed below. Reporting individual events can be controlled from the Dealer Web Site.

Following is a list of the default event codes sent by the 4550-CB:

EVENT DESCRIPTION	CONTACT ID EVENT CODE	SIA DC-03 EVENT CODE	MODEM IIe/ IIIa/IIIa[2]	ZONE NO. REPORTED
AC Loss	E301	AT	48	239
AC Restoral	R301	AR	49	239
Low Battery	E302	YT	4B	240
Low Battery Restoral	R302	YR	4C	240
Telco Trouble	E351	LT	44	241
Telco Restoral	R351	LR	45	241
Cable Supervision Trouble	E616	YX	11	242
Cable Supervision Restoral	R616	YZ	12	242
Cellular Service Loss	E355	YC	11	243
Cellular Service Restoral	R355	YK	12	243
Enclosure Tamper Trouble	E137	TA	10	244
Enclosure Tamper Restoral	R137	TR	12	244
Model 4550-CB Unit Disabled	E616	YX	11	245
Model 4550-CB Unit Restoral	R616	YZ	12	245

(APPENDIX B continued next page)

APPENDIX B:
MODEL 4550-CB DEFAULT EVENT CODES (cont.)

EVENT DESCRIPTION	CONTACT ID EVENT CODE	SIA DC-03 EVENT CODE	MODEM IIe/IIIa/IIIa[2]	ZONE NO. REPORTED
Watchdog Circuit Trouble	E616	YX	11	246
Watchdog Circuit Restoral	R616	YZ	12	246
Input 1 Alarm	E140	UA	10	247
Input 1 Normal	R140	UR	12	247
Input 2 Alarm	E140	UA	10	248
Input 2 Normal	R140	UR	12	248
Test	E602	TX	33	000

UPLINK 4G CELLULAR ALARM COMMUNICATOR
INSTALLATION, OPERATION AND PROGRAMMING GUIDE

© 2013 Uplink Security LLC. All rights reserved.
Uplink is a trademark of Uplink Security LLC.

GUIDE 00-25580-876 (REV. A)

3330 CUMBERLAND BLVD, SUITE 700, ATLANTA, GA 30339

888-987-5465 (888-9-UPLINK)

WWW.UPLINK.COM

uplink®

FOR SALES & PRODUCT INFORMATION

Uplink
3330 Cumberland Blvd
Suite 700
Atlanta, GA 30339
1-(888) 9-UPLINK
sales@uplink.com
www.uplink.com

FOR TECHNICAL SUPPORT

Please visit our website at www.uplink.com.